HIGH SIERRA ELECTRONICS, INC
environmental monitoring solutions

INSTRUCTION MANUAL

SURFACE SENTINEL
MODEL 5439-00

60-5439-00(A)
FW VER 00.02.00
3/10/2016

High Sierra Electronics, Inc
155 Spring Hill Dr., Suite 106
Grass Valley, CA
800-275-2080

CONTENTS

1.0 INTRODUCTION

1.1 GENERAL DESCRIPTION

The Model 5439 Surface Sentinel is a non-intrusive surface temperature sensor for fixed installations. The sensor provides the user with surface temperature, air temperature, relative humidity and dew point. An open collector, or closed-contact type output is provided for event-based device triggering. The status of the contact output is also provided in the SDI-12 output of the sensor. The Surface Sentinel's layered design, coupled with fan aspiration during the day, mitigates errors from sunlight heating the outer shell.

The Surface Sentinel features 2" spaced ¼"-20 threaded PEM nuts for mounting. It can be mounted from any suitable vantage point using off-the-shelf camera mounts, on a road-side pole or tower.

The Surface Sentinel operates in two layers. It collects measurements when polled through its SDI-12 interface allowing it to be used as part of a data logging or telemetry system. It is fully compatible with the HSE 3512/3306 line of data loggers and related equipment, as well as other industry-standard options. At the same time, measurements are collected periodically to determine if an alarm contact can be made. The contact output can be used to trigger Intelligent Transportation System (ITS) devices based on user defined sensor thresholds. An example would be to trigger an "Icy Bridge" sign when the bridge surface is near or below freezing. The user can configure the Surface Sentinel for this type of application through SDI-12 extended commands, using a laptop and an optional RS-232 to SDI-12 adapter.

1.2 RECEIVING, INSPECTION AND UNPACKING

Many High Sierra Electronics products are scientific instruments. Exercise care during unpacking and installation. Remove the contents of the package carefully and compare the contents with the enclosed packing list. Should any items be missing, notify High Sierra Electronics customer service. Please have the packing list available when calling.

The following items should be found in your package:

- 5439 Surface Sentinel
- 33 ft cable
- Two ¼"-20 screws with washer and lock washer
- Resource CD with:
  - Product Manual
  - Checkout Sheet

If any of the items are received in damaged condition, notify the carrier immediately and request an inspection. You must notify the carrier promptly. If a claim is not made in a timely period, then the carrier will not acknowledge any claim for the lost or damaged goods.

Claims for products lost or damaged in transit should be made by Buyer to the carrier, as risk of loss transfers to Buyer, and HSE's responsibility ceases upon its tender of products to Buyer, to Buyer's representative, or to a common carrier. Title of the products shall not pass to the Buyer until HSE has received payment in full for the products and all other sums due to HSE from the Buyer on any account. Until transfer of Title of the products, the Buyer shall ensure that the products are kept safe, secure and insured.

1.3 ORDERING GUIDE

Model 5439-00 ..... Surface Sentinel sensor with tinned leads
Model 5439-01 ..... Surface Sentinel sensor with RWIS RPU interface
Model 5439-02 ..... Surface Sentinel sensor with MS connector

Model 5439-70 ..... 1 to 2 inch pole mounting bracket
Model 5433-70 ..... 4 to 8 inch pole mounting bracket

2.0 SPECIFICATIONS

Range	3 to 50 ft (1 to 15 m)
Angle	35 to 90° from vertical
Field of View	12°, 2 ft (0.6 m) circle at 10 ft (3 m)
Operating Voltage	9.6 to 16 VDC, per SDI-12 spec
Current Draw	170 µA (average at 2 minute measurement without fan) 210 mA (max with fan running) at 12VDC supply voltage 7 mA (when measuring, without fan)
Fan Power Management	Based on Light Level
Default Emissivity Setting	0.96
Surface Temperature Range	-40° to 185° F (-40° to 85° C)
Surface Temperature Accuracy	±1° at 32° F otherwise ±2° F (±0.5° C at 0° C otherwise ±1° C)
Surface Temp Reaction Time	63% of Step Changes in 1 Second
Air Temperature Range	-40 to 149° F (-40 to 65° C)
Air Temperature Accuracy	±0.4° F at 32° F otherwise ±1° F (±0.2° C at 0° C otherwise ±0.5° C)
Air Temp Reaction Time	63% of step change in 15 Minutes
Humidity Range	0 to 100% RH
Humidity Accuracy	±1.8% at 10% to 90% RH otherwise ±3%
Humidity Reaction Time	63% of 35 to 80% RH step change in 12 Seconds
Measurement Time	Less than 1.0 second, fan off.
Outputs	SDI-12, Open Collector
Materials	Anodized aluminum, polycarbonate
Mounting	2 x 2 inch spaced ¼-20 threaded PEM nuts
Cable	33 ft (10 m) standard
Operating Air Temp	-40° to 185° F (-40° C to 85° C)
Operating Humidity	0 to 100% RH
Dimensions	8 x 3 x 3 inch (20 x 8 x 8 cm)
Weight	2 lbs (0.9 kg)
Shipping Weight	4 lbs (1.8 kg)

3.0 INSTALLATION

The 5439 Surface Sentinel is designed to be permanently installed, typically on a pole or lattice tower, with or without weather protection, and aimed downward at a surface. Considerations include distance from the surface area to be measured, reflections, and nearby, permanently-installed hot or heated equipment or structures anywhere in front of or positioned in such a way that heat from the equipment or structure can reach the sensor and disturb its measurements. Either direct or strong reflected sunlight (as from a large shiny metal surface, like a tin roof) arriving at the IR sensor at the front of the unit can introduce significant error in the surface temperature measurement.

Table 1. Installation Limitations.

Dimension	Range
Distance from sensor to target	3 to 50 feet, 1 to 15 meters
Angle (A)	35 to 90 degrees

Information needed at the time of order:

1. Sensor height from roadway surface (Y)
2. Distance from monitored spot (X)
3. Total distance from sensor to processing unit (Y+D), for cable sizing
4. Any possible line-of-site obstructions (i.e. curtain walls, utility poles, etc.)
5. Type of structure the sensor will be mounted (i.e. side of pole, wall or building, lattice tower, etc.)

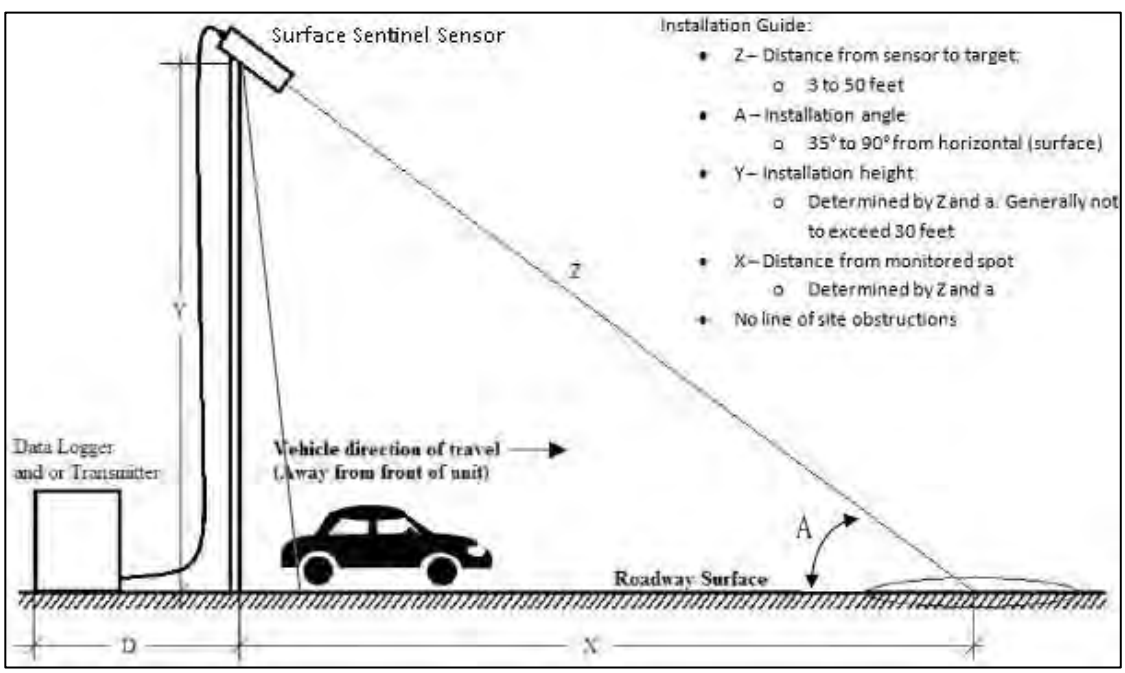

Figure 1

It is recommended to install the Surface Sentinel pointed north in the northern hemisphere, or at an angle of incidence higher than the local maximum solar elevation. This simple consideration shields the IR sensor from direct and most reflected solar radiation.

Table 2. Example Mounting Heights, Distances, and Angles

Length base to road (X)		Height of sensor (Y)		Angle (A)	Distance sensor to road (Z)	
Feet	Meters	Feet	Meters	Degrees	Feet	Meters
5	2	9	3	60	10	3
5	2	14	4	70	15	4
5	2	28	9	80	29	9
10	3	6	2	30	12	4
10	3	8	3	40	13	4
10	3	10	3	45	14	4
10	3	12	4	50	16	5
10	3	17	5	60	20	6
10	3	27	8	70	29	9
10	3	57	17	80	58	18
20	6	12	4	30	23	7
20	6	17	5	40	26	8
20	6	20	6	45	28	9
20	6	24	7	50	31	9
20	6	35	11	60	40	12
20	6	55	17	70	58	18
30	9	17	5	30	35	11
30	9	25	8	40	39	12
30	9	30	9	45	42	13
30	9	36	11	50	47	14
40	12	23	7	30	46	14
40	12	34	10	40	52	16

The installation angle and measuring distance can be calculated with the following equations:

$$A = \arctan \frac{Y}{X} \qquad Z = \sqrt{Y^2 + X^2}$$

3.1 FIELD OF VIEW

The area of measurement and its surroundings need to be considered when installing the sensor. The Field of View (FOV) angle can also be stated as 6° from axis. Objects within this angle contribute about 75% to the measured IR power. However, sources surrounding this area still contribute about 25% of the total measured IR power. Objects in the outer area, outside of an approximate 90° field of view, or 45° from axis, contribute insignificantly.

Tables 3A and 3B shown below provide approximate dimensions of the 12° Field of View pattern when the Surface Sentinel is aimed at a flat surface at an angle of 90° and 35°, as shown in Figure 1.

Table 3A. 12° Field of View (FOV) projected onto a flat surface directly downward, perpendicular to the surface.

Height of sensor (Y)		FOV Diameter		Area	
Feet	Meters	Feet	Meters	Feet²	Meters²
5.0	1.5	1.1	0.3	0.9	0.3
10.0	3.0	2.1	0.6	3.5	1.3
15.0	4.6	3.2	1.0	7.8	2.9
20.0	6.1	4.2	1.3	13.9	5.2
25.0	7.6	5.3	1.6	21.7	8.1
30.0	9.1	6.3	1.9	31.2	11.6
35.0	10.7	7.4	2.2	42.5	15.8
40.0	12.2	8.4	2.6	55.5	20.6
45.0	13.7	9.5	2.9	70.3	26.1
50.0	15.2	10.5	3.2	86.8	32.2

Table 4B. Elliptical pattern from 12° field of view projected onto flat surface at 35° angle A, after Figure 1.

Height of sensor (Y)		FOV, Short Dimension		FOV, Long Dimension		FOV, Area	
Feet	Meters	Feet	Meters	Feet	Meters	Feet²	Meters²
5	1.5	1.1	0.3	1.6	0.5	1.3	0.1
10	3	2.1	0.6	3.1	1.0	5.2	0.5
15	4.6	3.2	1.0	4.7	1.4	11.7	1.1
20	6.1	4.2	1.3	6.3	1.9	20.8	1.9
25	7.6	5.3	1.6	7.9	2.4	32.5	3.0
30	9.1	6.3	1.9	9.4	2.9	46.8	4.3
35	10.7	7.4	2.2	11.0	3.4	63.7	5.9
40	12.2	8.4	2.6	12.6	3.8	83.2	7.7
45	13.7	9.5	2.9	14.2	4.3	105.3	9.8
50	15.2	10.5	3.2	15.7	4.8	130.0	12.1

4.0 OPERATION

4.1 WIRING

It is recommended to power down your system before wiring the Surface Sentinel. Maximum allowable cable resistance on the common lead is 1Ω. Contact High Sierra Electronics if you'd like to power the sensor over a long cable run.

4.1.1 Connector pin-out and supplied cable.

Table 5

Color	Function	pin
Black	Power Ground	4
White	+12 VDC Power	2
Blue	SDI-12	3
Brown	Alarm Output	1
Shield	Housing Ground	Connector Body

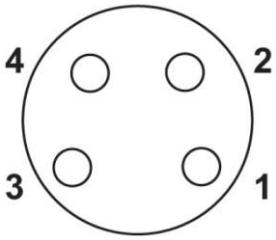

Figure 2 Cable Connector Pin Out

4.1.2 Driving a relay with the Surface Sentinel's alarm output.

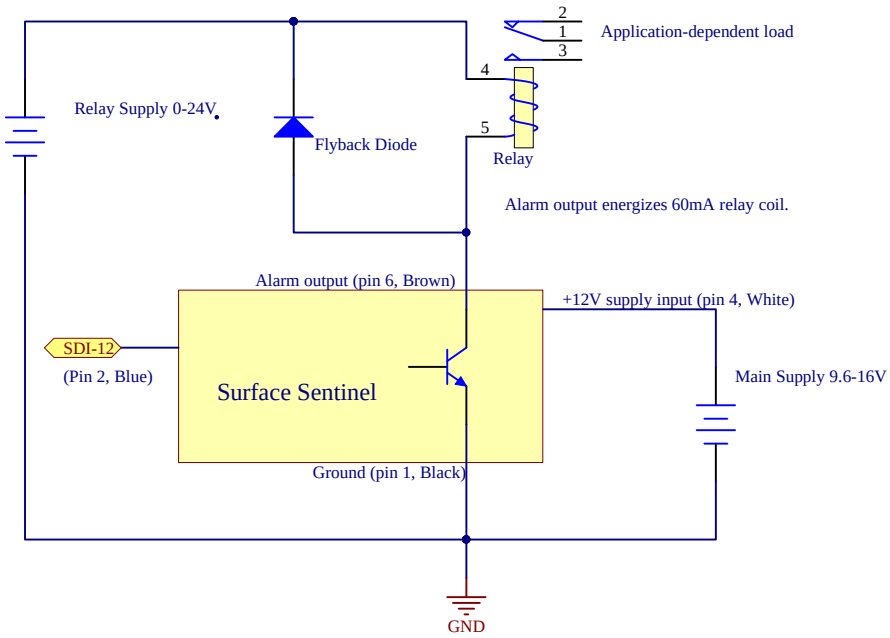

Figure 3 Alarm output schematic

4.1.3 Connecting to a laptop or PC.

HSE provides a simple software tool, SDI12Comm.exe, which can be installed from the supplied Resource CD or downloaded from our FTP site (contact our Sales Department for access). An FTDI-based USB to RS232C adapter is recommended for use with our RS-232 to SDI-12 adapter, if your computer lacks an RS-232C serial port.

Connect the black wires together and the yellow from the adapter to the white on the Surface Sentinel's cable.

RS-232C port break timing has become inconsistent, so depending upon the platform, sometimes the Surface Sentinel will not respond to SDI12Comm.exe. Simply re-issue the command until it does.

For other methods of controlling the Surface Sentinel, or more information, contact our Sales Department.

4.2 SDI-12

SDI-12 is a Serial Digital Interface standard that is used for communication between data processing units and sensors. The communications protocol is compatible with HSE and other manufacturer data processors and recorders.

4.2.1 SDI-12 command description legend

Refer to the chart below to clarify the meaning of variables used in command descriptions.

a,b	address (0-9, a-z, or A-Z are valid)
c	manufacturer
d	decimal digit
l	SDI version
m	model
s	sign character (+,-)
t	maximum time in seconds
U	temperature units
v	firmware version
x	hexadecimal digit
<CR>	carriage return, 0xD
<LF>	linefeed, 0xA
UPPER CASE	SDI-12 command characters
whitespace	ignore, SDI-12 does not use this, placed for readability

4.2.2 Standard SDI-12 Commands

The default address of the Surface Sentinel is set to 0. It can be set in the range from 0 to 9, a to z, or A to Z. This allows up to 10 sensors to be connected to a single SDI-12 channel. The address can be changed by sending an SDI-12 command to the sensor.

a. Change the SDI-12 address of the sensor.

To change the address of the Surface Sentinel that has a default address of 0 to the address of 1 the following command can be sent:

0A1!

Description	Sets the address of the sensor to a valid value in the range of 0-9, a-z, or A-Z. In the example below, a is the current address and b is the new address.
Command	aAb!
Response Format	b<CR><LF>

b. Make a measurement

Description	Commands the sensor to take a measurement. The response contains the maximum time data will be ready, in seconds, and the number of measurements. The sensor will issue a service request when it has data ready.
Command	aM!
Response Format	atttn<CR><LF> a<CR><LF>
Example	Command: 0M! Response: 00106<CR><LF> 0<CR><LF> (Service Request issued when done)

c. Send Data

Description	Allows the data recorder to retrieve data from the sensor in response to the sensor's service request. Temperature units are selectable. See table below for descriptions of response format.
Command	aD0!
Response Format in case of Start Measurement command aM!	A s aaa.a s bbb.b s ccc.c s ddd.d + ee + f <CR><LF>

Parameter	Description
A	Address (0-9, a-z, A-Z)
a	Surface Temperature (Celsius)
b	Air Temperature (Celsius)
c	Relative Humidity (%)
d	Dew Point (Celsius)
e1	Error code. Should be zero.
e2	Alarm Output (0 - no alarm, 1 - low temp, 2 - high temp, 3 - frost warning)
f	Fan Output (5 - fan on, 6 - no-start, 7 - continual error, 8 - fan off)

Error reporting: In the event that an internal sensor has a problem reporting in the allotted time, or there was a power cycle just before the data report, error code e1 will be a non-zero single digit and the output of the affected parameter will be an impossible temperature or relative humidity. -399.9°C, -999.9°C, or -1.0%RH

d. Acknowledge Active

Description	Returns a response acknowledging that the sensor unit is active.
Command	a!
Response Format	a<CR><LF>
Example	Command: 0! Response: 0<CR><LF>

e. Send Identification

Description	Returns SDI version, company name, sensor model, and version#
Command	aI!
Response Format	allcccccccccmmmmmmmvvvvvvvv<CR><LF>
Example	Command: 0I! Response: 013HSE,Inc.SS543901.00.00<CR><LF>

f. Address Query

Description	Returns the address of the connected sensor. Connect only one sensor to use this query.
Command	?!
Response Format	a<CR><LF>

g. Continuous Measurement

In this mode, the sensor periodically performs a measurement and sends notification, without being polled.

Data can be read by R0 commands, in exactly the same matter as D0 commands. However, a measurement command is not required. Measurements are updated at the end of a sleep period. The response format is the same as if a Start Measurement command had been issued. Refer to section 4.2.2.**c**, above.

4.2.3 SDI-12 Extended Commands

The Surface Sentinel offers a substantial set of configurable parameters for the user to adjust the device to its application, if needed. The default values are nominal ones set at the factory when the device is programmed. These default values may change at any time, without notice. Users may request specific values be loaded prior to test. Most of these values are stored in flash memory, which has a guaranteed 10,000 re-write cycles. For this reason, dynamically updating these values (from a programmed controller, perhaps) is discouraged. For example, if a flash-stored extended command value was written every hour, the sensor might fail to continue operating correctly as early as 10,000 hours, or 416 days.

4.2.4 SDI-12 Extended Command Format

Extended commands allow the user to read and write integer, character, and floating point values. Inputs are limited to a specific range, as appropriate. Outside values are clipped to the maximum or minimum value and the result is entered. Unsupported commands are ignored. Written values are returned in response to a write command.

a. Read a value

Description	Read a value from memory
Command	aXR cmd !
Response Format	a s val<CR><LF>

For example, to read the alarm low temp threshold of sensor 3, issue the following command:

3XRL!

The sensor will return a response similar to this:

3+000.500<CR><LF>

b. Write a value

Description	Write a value to memory
Command	aXW cmd val!
Response Format	a s val <CR><LF>

For example, to change the alarm low temp threshold of sensor 3 to +2°C, issue the following command:

3XWL2.0!

The sensor will return this response, if it received the command:

3+002.000<CR><LF>

4.2.5 SDI-12 Extended Command Definitions

The Surface Sentinel offers a substantial set of configurable parameters for the user to adjust the device to its application, if needed. The default values are nominal ones set at the factory when the device is programmed. These default values may change at any time, without notice. Users may request specific values be loaded prior to test.

a. Alarm output behavior

Command	Function	Range	Default
A	Alarm condition selection	1,2,3	1
W	Alarm dew point spread threshold	-40 to 70°C	2° C
H	Alarm high temp threshold	-40 to 70°C	40° C
L	Alarm low temp threshold	-40 to 70°C	0.5° C
Q	Alarm temp hysteresis	0 to 130°C	2° C

Example: 0XWA1! This sets the alarm output to respond to a temperature below the threshold. Refer to the Alarm Output section for an explanation of these settings.

b. Calibrations

Command	Function	Range	Default
CT	Ambient temperature offset	float	0
CA	Ambient temperature scaling	float	1
CR	Object temperature offset	float	0
CI	Object temperature scaling	float	1
CH	Relative humidity offset	float	0
CL	Relative humidity scaling	float	1

Example: 0XWCT-1.234! This command sets the temperature offset, so that the sensor will report a value 1.234 degrees Celcius below the temperature it measures. Temperature offset and scaling can be introduced by the user or may be ordered to be set at the factory so that the output of the Surface Sentinel can match that of previous or dissimilar equipment, if needed.

c. Fan

Command	Function	Range	Default
D	Fan control AC light source thresh	0 to 4096	typical on value 50, default set to 4096 (off)
T	Fan control light threshold	0 to 4096	120
Y	Fan control threshold hysteresis	0 to 4096	60
P	Fan default speed after POR [%]	0 to 100	80
F	Immediate fan speed change [%]	0 to 100	current fan speed
B	Low battery fan shutoff voltage [V]	float	10.5

Aspiration is a major, but non-obvious feature of the Surface Sentinel. It is required to mitigate errors caused by sunlight. However, the fan can use up to 250mA of current draw in some conditions. Several adjustments can be made to optimize fan behavior to fit a given application. From the bottom of the table, above, up:

B – Low battery fan shutoff voltage.

The Surface Sentinel measures the incoming power supply voltage and will shut-off the fan if the voltage drops below the specified value. Voltage measurement accuracy is $\pm 1\%$.

F – Immediate Fan Speed Change.

This parameter is the only non-flash stored parameter. This parameter can be modified at will, and is intended for dynamic control of the fan by an external system. Writing this setting overwrites the current value of the fan speed. The Surface Sentinel's normal fan-checking mechanisms, including battery voltage, are overridden until a daylight cycle has occurred (or after the Surface Sentinel has been tricked into believing this has occurred, by manipulating flash-stored extended commands).

P – Fan default speed after POR (Power Or Reset).

This parameter sets the speed the fan runs at, normally. Fan speed diminishes somewhat with voltages below 12V, however, speed regulation is excellent above that.

T – Fan control light threshold, and Y – Fan control threshold hysteresis.

These parameters work in conjunction to determine if the fan is turned off or on. Set the threshold to a high number, such as 4096, to turn the fan completely off, as the measured light level can never reach that value. Set this value to 0 to keep the fan on at all times (in conjunction to setting the battery voltage to a low value and AC light source threshold to a high one). With a value of 120, the fan will engage in early morning sunlight conditions. It will have to reach a dusk value of 90 to turn off, provided the fan control hysteresis value set to 30, for example. In other words, the value will have to drop below the threshold by the value set by command Y.

D– Fan control AC light source threshold.

By default, this feature is set to off. However, in the event that an AC powered light source is keeping the fan in the Surface Sentinel on at night, thereby wasting battery power, this value can be set to a low one, between 5 and 100, to detect that an AC-powered light is the dominant light source. Sunlight will produce a value lower than 5, often less than 1. The value cannot be negative. There will have to be some experimentation with settings. The highest value that renders the desired result is best.

d. Temperature scale, sleep period

Command	Function	Range	Default
S	Measurement and Sleep period [x2s]	1 to 32768	15
M	Reported Temperature Scale	C, F	C

S – Measurement and Sleep period.

The Surface Sentinel takes measurements and evaluates alarm conditions, light level, and fan operation periodically. Setting S to a value of 1 will cause the Surface Sentinel to wake and measure every eight seconds after power-up or SDI-12 polling. A value of 32768 will cause this to occur at about 72.8 hours. Divide the desired time, in seconds, by eight and enter that value. The default value of 15 causes this to occur every half minute. (2s X 15 = 30s).

M – Temperature Scale.

Temperatures can be reported in either °C or °F, however this does not change alarm output decision temperature scales, which are always °C.

4.3 ALARM OUTPUT

An alarm output is provided directly from the sensor. It can be used to drive a relay based on three conditions that can be set by the user. The settings are in degrees Celsius regardless of reporting temperature scale setting. The test is run at every measurement. By default, this occurs every two minutes without SDI-12 polling, or two minutes after SDI-12 polling. The measurement period can be decreased to every eight seconds, or increased, by using the sleep period command, explained in the extended commands section along with how to set the following parameters.

4.3.1 Low Surface Temperature Threshold

If alarm condition “1” is selected, the alarm output pulls the line low when the surface temperature measurement is less than or equal to the threshold. Default is set to 0°C.

$$Activation \equiv T_{surface} \leq T_{low}$$
$$Deactivation \equiv T_{surface} > T_{low} + T_{hysteresis}$$

For example, if the low temperature threshold is set to 1.0°C, and the measured surface temperature drops below or equals 1.0°C, then the alarm will trigger. If the hysteresis threshold was left at its default value of 2.0°C, then the alarm will shut off once the measured surface temperature rises above 3.0°C.

4.3.2 High Surface Temperature Threshold

If alarm condition “2” is selected, the alarm output pulls the line low when the surface temperature measurement is greater than or equal to the threshold. Default is set to 40°C.

$$Activation \equiv T_{surface} \geq T_{high}$$
$$Deactivation \equiv T_{surface} < T_{high} - T_{hysteresis}$$

For example, if the high temperature threshold is set to 42.0°C, and the measured surface temperature rises above or equals 35.0°C, then the alarm will trigger. If the hysteresis threshold was set to 1.0°C, then the alarm will shut off once the measured surface temperature has reached below 41.0°C.

4.3.3 Frost Warning

If alarm condition “3” is selected, the alarm output pulls the line low when the surface temperature is less than or equal to the surface temperature threshold (default 0°C) and the surface temperature minus the dew point temperature is less than or equal to the threshold (default 2°C).

$$Activation \equiv T_{surface} \leq T_{low} \;\; AND \;\; T_{surface} - T_{dew\,point} \leq T_{spread}$$
$$Dectivation \equiv T_{surface} > T_{low} \;\; OR \;\; T_{surface} - T_{dew\,point} > T_{spread}$$

For example, if the low temperature threshold is set to 0.5°C, and the temperature of the surface is below that, say -1.0°C, that will satisfy the first test. For the alarm to trigger, however, the surface has to come to a point where if it falls so many more degrees, it will fall below the dew point temperature and frost may form. That “so many more degrees” allowable is the dew point spread threshold. Setting the dew point spread threshold to 2°C, for example, conservatively allows for variations in temperature between the measurement sample and other location. However, conditions may dictate a wider spread threshold or a higher low temperature threshold.

4.3.4 Surface Temperature Hysteresis

When the alarm is activated, the setting requires that the conditions are relieved from the threshold value by the hysteresis amount. The default value is 2°C.

When using the low surface temperature threshold the hysteresis temperature should be higher than the low surface temperature threshold value. When using the high surface temperature threshold the hysteresis temperature should lower than the high surface temperature threshold value. For frost detection, both the temperature and dew point spread must be exceeded by the set amount.

4.3.5 Alarm Tally

For the alarm output only, the alarm indication must be the same for four consecutive measurement cycles for the alarm to be acted upon by the alarm relay control. The default measurement and sleep period is 30 seconds, so an occurrence of a change condition would need to occur over four measurements spaced a half minute apart, or for two minutes ±30s.

5.0 MAINTENANCE

Periodic maintenance will need to be performed to insure successful operation of the Surface Sentinel sensor. Maintenance intervals are recommended to be performed twice a year before and after the winter season. However, interval times should ultimately be determined by the environment the sensor is monitoring.

Maintenance of sensor includes the following:

1) Removing and cleaning Filter Cap. Cleaning is performed by rinsing off exterior of Filter Cap. A damp cloth may also be used. Allow to dry before reinstalling.
2) Inspecting fan. Listen to fan operation for any unusual noise or vibration. Verify proper fan power up/power down.

5.1 REPLACING FAN

Fan replacement requires the following tools:

1) New fan assembly (w/zip tie)
2) 5/64” hex key
3) 1/4” wrench
4) Small wire cutters

Fan replacement procedure:

1) Remove (4) socket head screws attaching Vent Cap to sensor. Remove Vent Cap.
2) Remove (4) socket head screws at the rear of the main housing.
3) Slide out inner assembly until fan connector is visible.
4) Cut the zip tie holding the fan wires and unplug fan connector.
5) Remove (4) standoffs using ¼” wrench and pull fan assembly off.
6) Swap Fan into Fan Bracket (note fan orientation and direction) and install onto inner assembly. (Note: wire harness from fan must align with connector).
7) Connect Fan connector and use zip tie to hold fan wire harness to standoff.
8) Install standoffs.
9) Slide inner assembly into shell, install (4X) socket head screws.
10) Attach back cover using (4x) socket head screws.

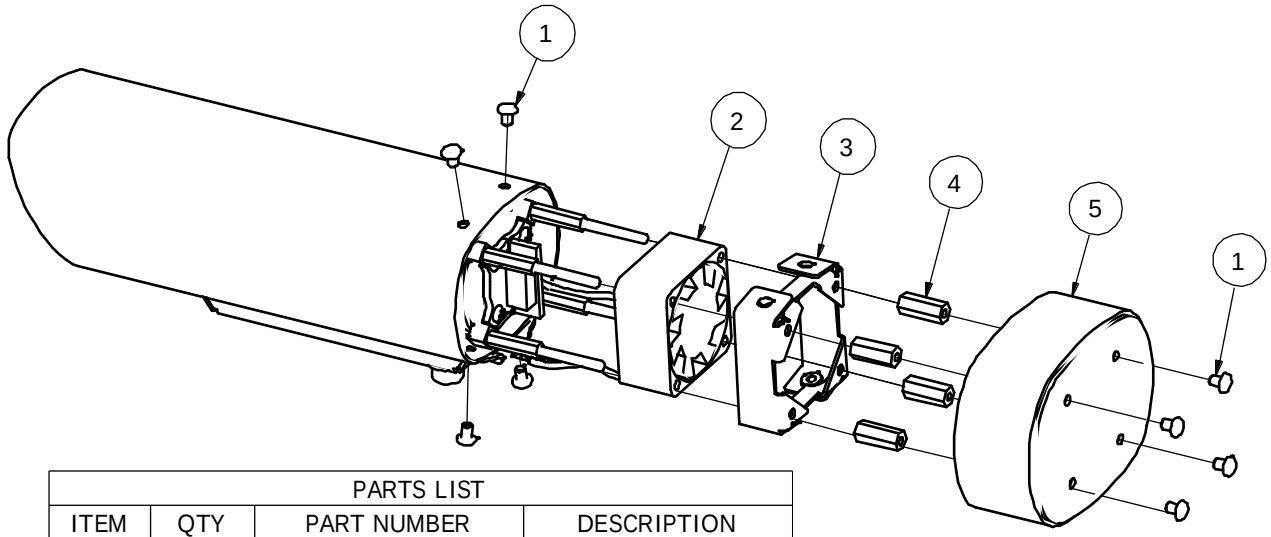

PARTS LIST			
ITEM	QTY	PART NUMBER	DESCRIPTION
1	8	H403052A	SCREW, 6-32
2	1	FAN0001A	FAN
3	1	12-13404-12	FAN BRACKET
4	4	H990051A	STANDOFF, 6-32
5	1	12-13404-10	VENT CAP

5.2 REPLACING FILTER CAP

Replacing Filter Cap requires Filter Cap Tool. To replace Filter Cap, align Filter Cap Tool pins with holes in Filter Cap. This should be a snug fit allowing Filter Cap Tool to hold Filter Cap when installing or removing. Tighten Filter Cap no more than finger tight.

6.0 TROUBLESHOOTING

- Power: Verify correct voltage to sensor of 9.6V to 16V DC.
- Air temp too high: check fan status to see if fan is being triggered. Check fan by reading immediate fan speed, refer to section: 4.2.4.c
- Surface temperature too high: Angle sensor down to prevent sunlight onto front of sensor.
- No SDI-12 response: Send acknowledge command; refer to section 4.2.2.d.
- No startup. Fan spins up and the alarm output is briefly activated upon power-up. During this time, less than ten seconds, the sensor does not respond to SDI-12. Check connections and power. Refer to section: 4.1.1.
- No alarm output. Check SDI string for alarm condition to see if it’s being triggered. Check wiring. Refer to section: 4.1.2.

7.0 RETURNS

Repairs to equipment are processed by our Manufacturing Department. When repair service is needed, call HSE at (800) 275-2080 between 7:00 a.m. and 4:00 p.m. PST.

A confirmation of your equipment's warranty status and a Return Material Authorization (RMA) Number will be issued. Once you obtain an RMA number, carefully pack the unit so that it will not be damaged in shipment. Write the RMA number on the outside of the box and on any paperwork enclosed with the unit. Please include a written description of the problem and any unique conditions that occurred when the unit failed.

Ship the equipment to our factory at the address listed below, clearly indicating the RMA number on the shipping papers and carton. Transportation charges to return the equipment are paid by the customer. Please use our RMA Customer Form (www.highsierraelectronics.com/customer-service/repair-and-calibration) when returning equipment for repair and/or evaluation.

High Sierra Electronics, Inc.
155 Spring Hill Drive, Suite 106
Grass Valley, CA USA 95945

8.0 PARTS, SPARES AND ACCESSORIES

For part numbers to spare parts and accessories, please refer to our website: http://highsierraelectronics.com/products, email at sales@highsierraelectronics.com or call sales at (800) 275-2080 between 7:00 a.m. and 4:00 p.m. PST.

9.0 WARRANTY

Refer to HSE Warranty Statement on our website or call to obtain more information: www.highsierraelectronics.com/customer-service/warranty.html or (800) 275-2080.